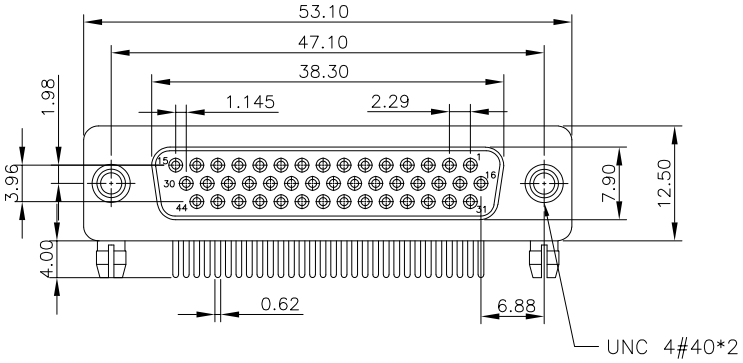

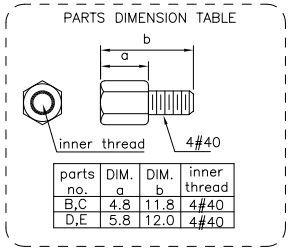

parts no.	DIM. a	DIM. b	inner thread
B,C	4.8	11.8	4#40
D,E	5.8	12.0	4#40

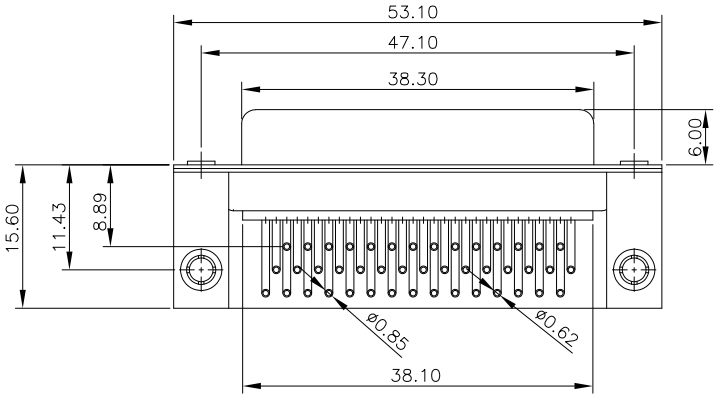

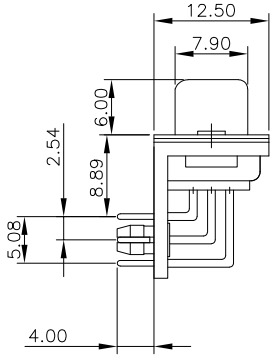

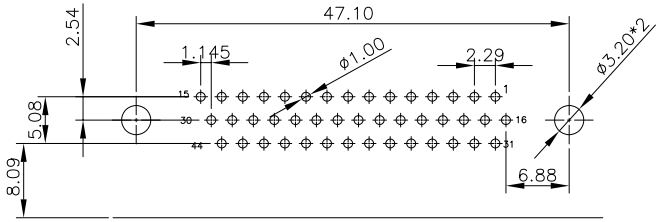

RECOMMENDED P.C.B LAYOUT (TOP VIEW)
TOLERANCES: ±0.10mm

SPECIFICATION
MATERIAL
Insulator: PBT, rated UL94V-0
Contacts: Brass
Shell: Steel
Rivet,Boardlock: Copper alloy
CONTACT PLATING
Contact area: 1u"~30u" gold
ELECTRICAL
Operation voltage: 250 VAC max.
Current rating: 3 Amps max.
Contact resistance: 15 mohms max.
Insulation resistance: 3000 Mohms min @ 500 VDC
Dielectric withstanding voltage: 1000 VAC / minute
Operating temperature: -55°C TO +105°C
Part no.

106 A E 44 F G T C K A 1
1 2 3 4 5 6 7 8 9 10 11

1.SERIES NO.
106 = D-SUB HDD 8.89*2.54mm P.C.B. RIGHT ANGLE (MACHINED PIN)
(D-SUB高密度 90度PCB 車針)
2.TYPE: A = Standard
3.ENVIRONMENT PROTECTION MATERIAL:
E = RoHS環保料件
4.CONTACT NUMBER:
44 = 44 PIN
5.CONTACT TYPE:
F = FEMALE (母)
6.CONTACT AREA PLATING:
G = GOLD FLASH (全金)
R = 3"u GOLD (全金)
A = 5"u GOLD (全金)
C = 15"u GOLD (全金)
D = 30"u GOLD (全金)
7.SHELL PLATING:
T = TIN (鍍錫)
8.BRACKET OPTION
C = HARDWARE/BRACKET W/O BOARD
(有鐵支架,沒有檔板)
9.RIVET & BOARDLOCK OPTION
K = REAR RIVET W/4-PRONG BOARDLOCK
(卯後殼, 四爪乙片)
10.PARTS OPTION
A = NON ACCESSORIES(無附件)
B = LOOSE SCREWS 4.8*11.8mm (附4.8*11.8mm螺絲)
C = FIXED SCREWS 4.8*11.8mm (鎖4.8*11.8mm螺絲)
D = LOOSE SCREWS 5.8*11.8mm (附5.8*11.8mm螺絲)
E = FIXED SCREWS 5.8*11.8mm (鎖5.8*11.8mm螺絲)
11.INSULATOR COLOR
1 = WHITE (白色)
2 = BLUE (藍色)
3 = BLACK (黑色)

UNLESS OTHERWISE SPECIFIED TOLERANCE
ANG. ±5°
0. ±0.5
.0 ±0.3
.00 ±0.2

亮泰（中国）有限公司
Lightany (China) Co., Ltd.

SCALE: As show	UNIT: mm		
DRAWN AVA	07/07/04	DRAWN NAME: D-SUB HDD 8.89*2.54mm P.C.B. RIGHT ANGLE(MACHINED),鐵支架沒有檔板+DR 8.89*2.54mm 90度車針,44PIN,FEMALE(母),全金,卯後殼卯四爪乙片	
CHECKED WAN	07/07/04		
APPROVED CHEN	07/07/04	PRODUCT NO. 106AE44FGTCKA1	
SIZE A4	REV. A	FILE NAME: 106AE44FGTCKA1	

REV.	DESCRIPTION	DATE
A	ECN-20040707001(TONY)	07/07/04